DIVERTER REPLACEMENT GUIDE

Kitchen Faucet Model #s 4300
Prep Faucet Model #s 4900

1.

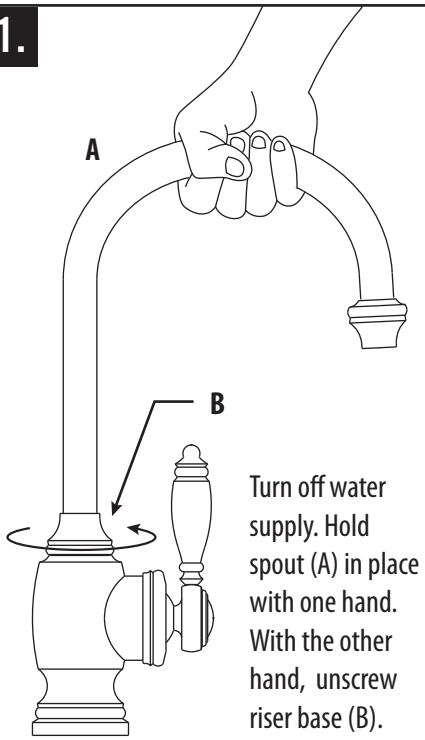

Turn off water supply. Hold spout (A) in place with one hand. With the other hand, unscrew riser base (B).

2.

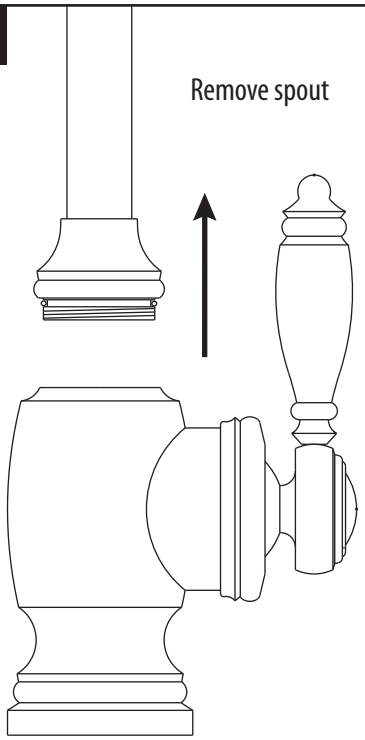

Remove spout

3.

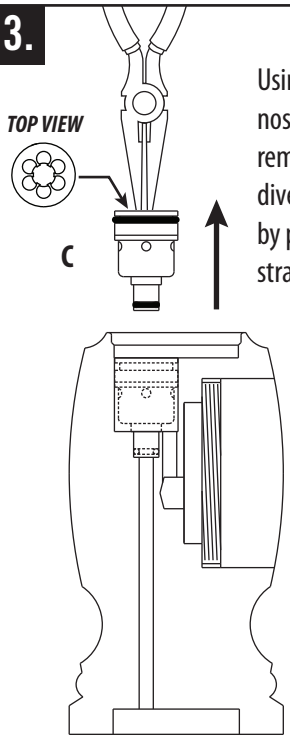

Using a needle nose pliers, remove old diverter (C) by pulling it straight up.

4.

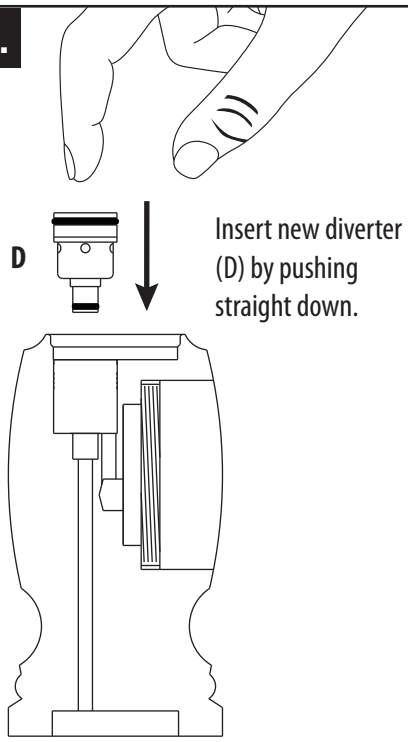

Insert new diverter (D) by pushing straight down.

5.

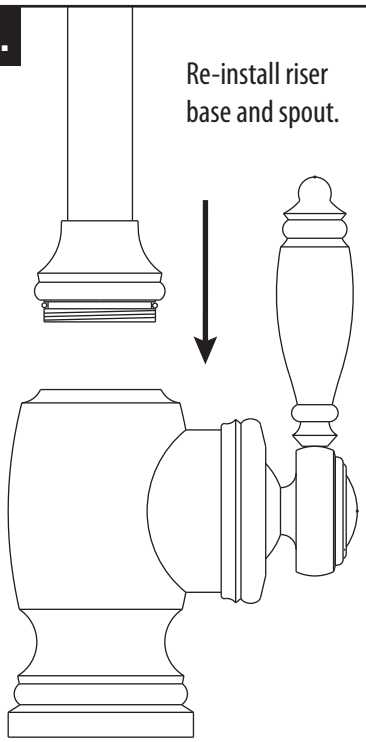

Re-install riser base and spout.

6.

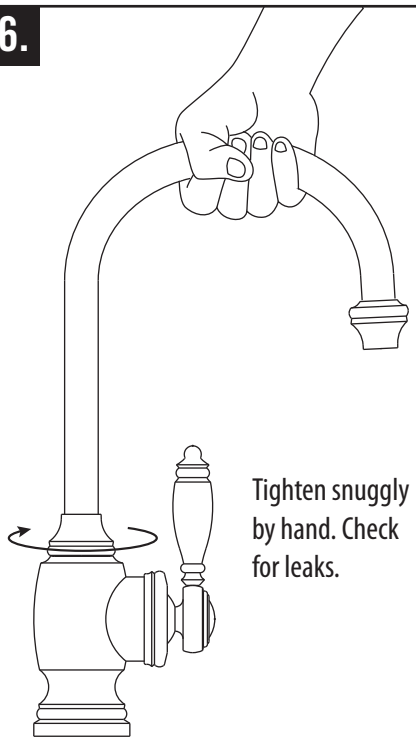

Tighten snuggly by hand. Check for leaks.

41180 Raintree Court • Murrieta, CA 92562
1-888-304-0660 • 951-304-0520
www.waterstoneco.com

★ MADE IN CALIFORNIA, USA ★

VEN-038-RK-KFD Rev. A