DIVERTER REPLACEMENT GUIDE

Kitchen Faucet Model #s 4100-12, 4100-18, 4200
Prep Faucet Model #s 4700, 4800

1.

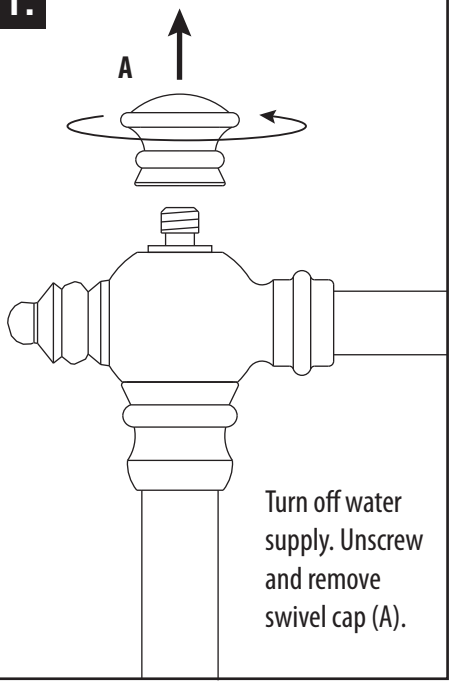

Turn off water supply. Unscrew and remove swivel cap (A).

2.

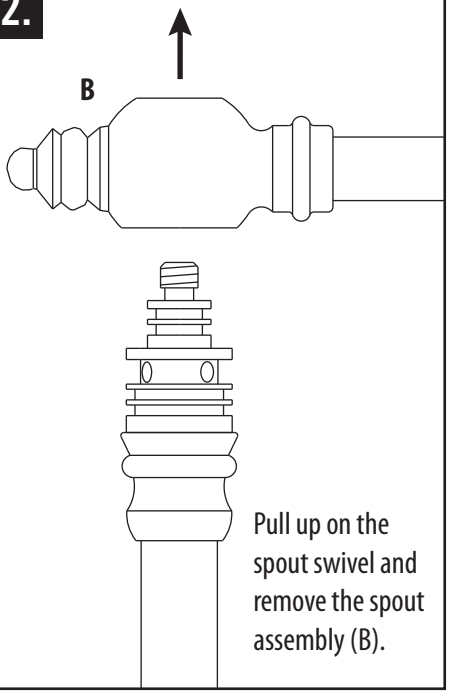

Pull up on the spout swivel and remove the spout assembly (B).

3.

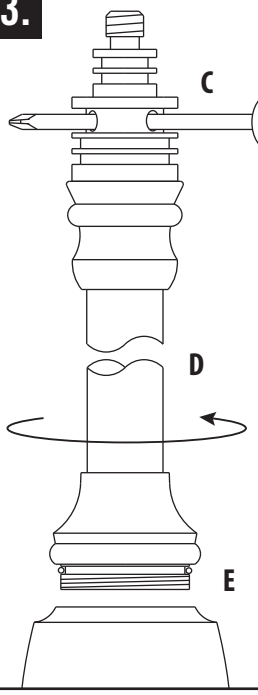

Insert phillips screwdriver through water passage holes (C) in riser top to loosen the riser assembly (D). Assembly should turn and unscrew from riser base (E).

4.

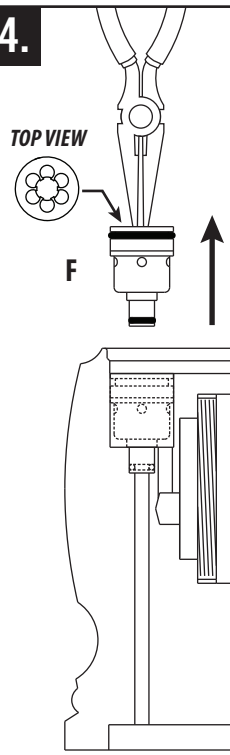

Using a needle nose pliers, remove old diverter (F) by pulling it straight up.

5.

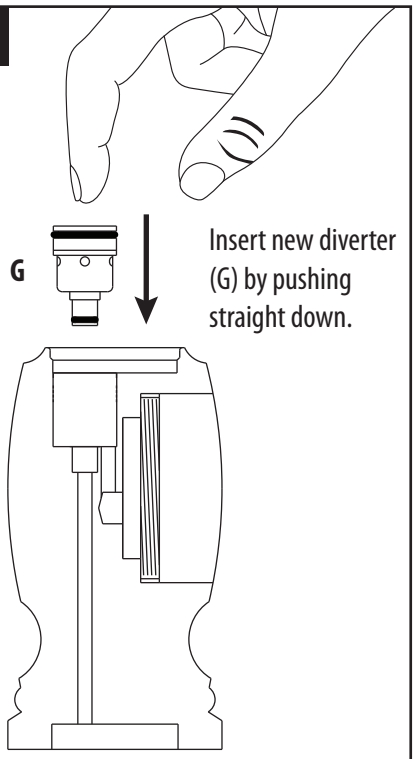

Insert new diverter (G) by pushing straight down.

6.

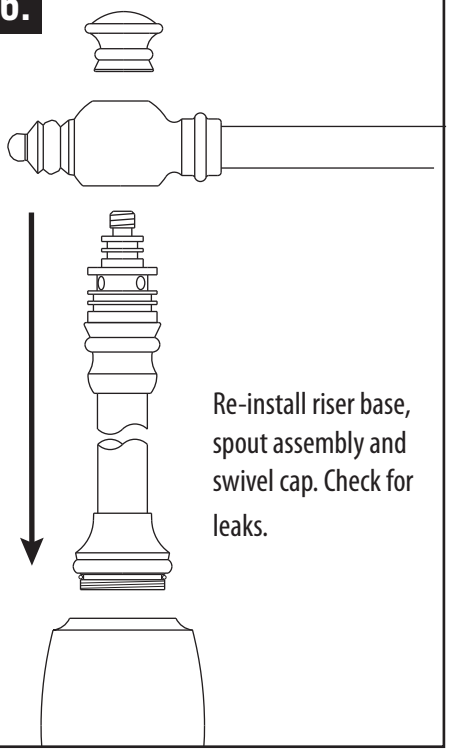

Re-install riser base, spout assembly and swivel cap. Check for leaks.

41180 Raintree Court • Murrieta, CA 92562
1-888-304-0660 • 951-304-0520
www.waterstoneco.com

★ MADE IN CALIFORNIA, USA ★

VEN-038-RK-KFD Rev. A